PARTS LIST FOR MODELS 750SSM AND 850SSM

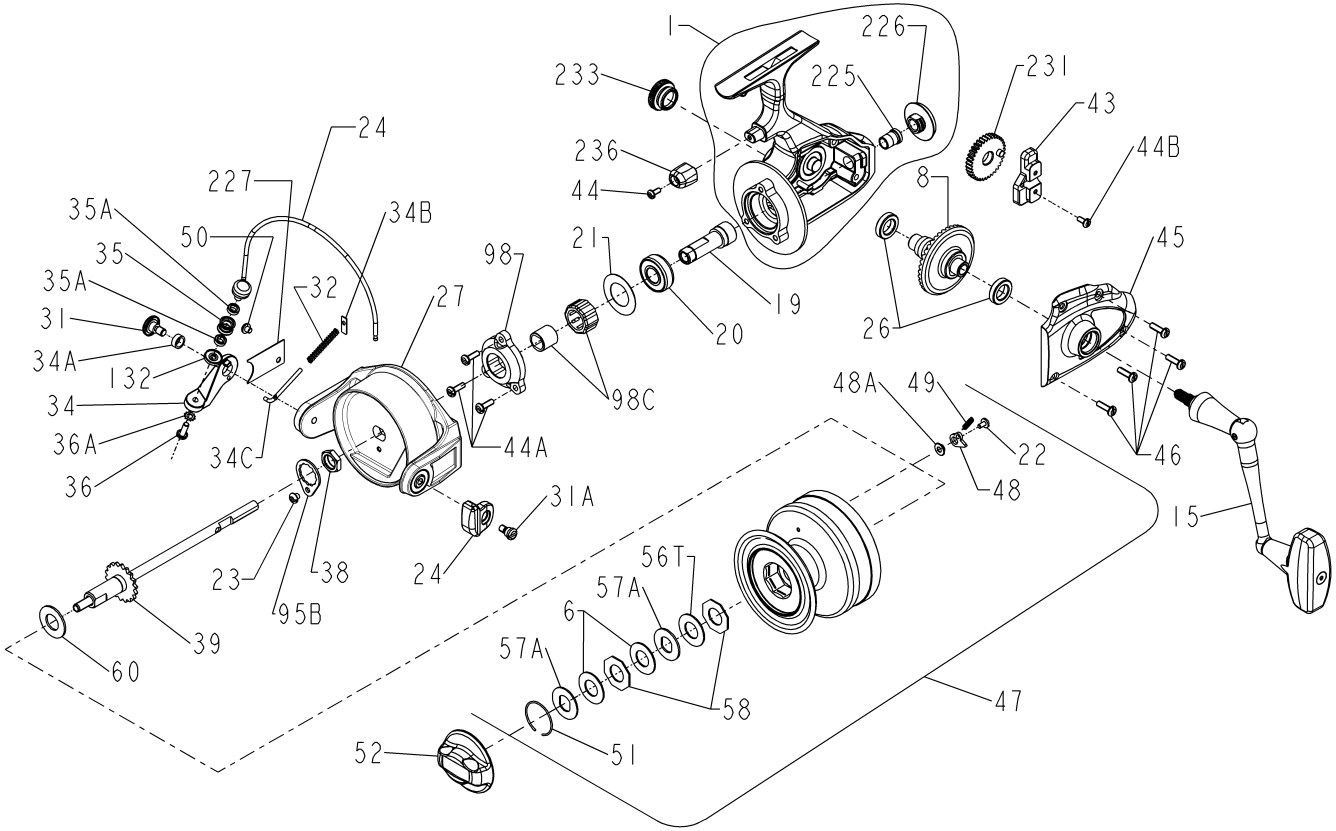

KEY NO.	PART NO.	DESCRIPTION
1	001 750M	Housing Assembly
	001 850M	Housing Assembly
6	006 060	Drag Washer HT-100 (2 req.)
8	008P7500	Main Gear
15	015 750M	Handle Assembly (750SSM)
	015 950M	Handle Assembly (850SSM)
19	019 750M	Pinion
20	020 704	Ball Bearing
21	021 750M	Bearing Cover
22	022 750	Spool Click Screw
23	023 750	Locking Plate Screw
24	024 750MC	Bail Wire Assembly
	024 850M	Bail Wire Assembly
26	026A2.5FR	Ball Bearing (2 req.)
27	027 750M	Rotor
	027 850M	Rotor
31	031 750M	Bail Arm Screw
31A	031A550G	Bail Cam Screw
32	032 750M	Bail Spring
34	034 750M	Bail Arm
34A	034A750	Bail Arm Bushing
34B	034B750M	Pivot Plate
34C	034C750M	Pivot Arm
35	035 750M	Line Roller
35A	035A8500J	Ball Bearing (2 req.)
36	036 750	Bail Stud Screw
36A	036A750	Lock Washer
38	038 710	Rotor Nut
39	039 750M	Spool Shaft
43	043 750M	Crosswind Block
44	044 750	Screw
44A	044 710	Screw (3 req.)
44B	044 560	Crosswind Screw
45	045 750M	Housing Cover
	045 850M	Housing Cover
46	046 750	Cover Screw (4 req.)
47	047 750M	Spool Assembly
	047 850M	Spool Assembly
48	048 750	Click Tongue
48A	048A750	Click Tongue Washer
49	049 710	Click Tongue Spring
51	051 704	Retaining Ring
50	050 712	Screw
52	052 750	Drag Knob Assembly
56T	056T704	Drag Washer, Teflon
57A	057A750	Drag Washer, Keyed (2 req.)
58	058 704	Drag Washer Octagon. (2 req.)
60	060 750M	Thrust Washer
95B	095B070	Locking Plate
98	098 750M	Clutch Housing
98C	098C750M	Clutch Bearing and Sleeve
132	132 750M	Bail Washer
225	225 750	Spool Shaft Bushing
226	226 750M	Rear Cap
227	227 750M	Bail Spring Cover
231	231 750M	Crosswind Gear
233	233 550G	Bearing Cover
236	236 750M	Trip Bumper